HeavyDutySwitch HDS

The modular switchgear platform for heavy industry

NEW

SCHMERSAL

HDS

The flexible and modular switchgear platform

The new switchgear generation is based on a standardised housing concept, either in plastic (thermosetting resin) or grey cast iron.

At functional level, both emergency stop and general position monitoring applications can be mapped. A kit of various actuating elements is available, according to the specific application, for position monitoring. To enable better diagnostics, all variants can be optionally equipped with a two-wire field bus solution or an indicator lamp. The requirements of a global product family are satisfied by a range of international approvals.

In addition, all switchgear satisfy the requirements for safety switches with positive break contacts in accordance with IEC 60957-5-1 as well as form fit over the toothed shaft between the basic component and all actuating elements.

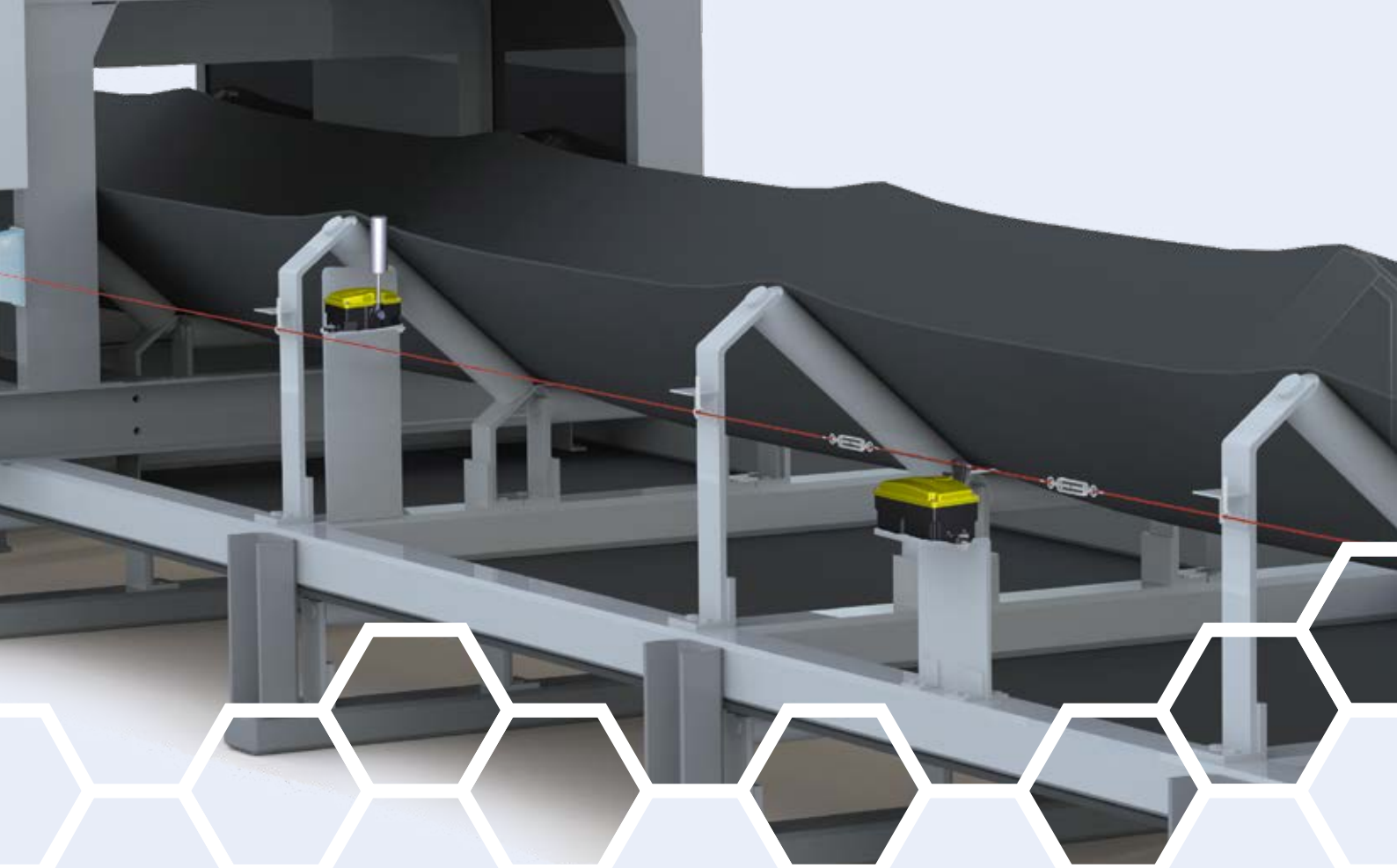

HDS
Application usage

The flexible and modular fourth generation switchgear platform for the widest range of applications in heavy industry

Switchgear can be used in emergency-stop applications or for position monitoring of moving machines and plant parts for reliable shut-off up to Performance Level PL e.

Protection classes IP66 and IP67 ensure the preconditions for use of the switchgear family under extreme ambient conditions.

Typical applications include:

- Emergency-stop shut-off on conveyor systems
- Belt alignment monitoring on material handling plants
- Position monitoring in steel production processes
- Fill level monitoring at transfer points or silos
- Belt crack monitoring on conveyor belts
- Slack rope monitoring for cranes or transport equipment

HDS – the modular switchgear platform

1. Select housing variant

cast iron

BS655-xxx

thermosetting resin

BS656-xxx

2. Combination with function unit

BELT CONTROL

BS-B30-150-RVA

BS-B50-150-RVA

BS-B90-150-RVA

POSITION CONTROL

BS-H50-110-RKS

BS-H50-110-RVA

LEVEL CONTROL

BS-N95-x00-RKS
(under preparation)

3. Options

SIGNAL CONTROL

BS65x-Z22-DN

Dupline Feldbus Installationsbus

BS65x-xxx--G

SCHMERSAL

Pull-wire emergency stop switches

cast iron

RS655-Z22

thermosetting resin

RS656-Z22

STOP CONTROL

RS65x-Z22

SIGNAL CONTROL

RS65x-Z22-DS

Dupline Fieldbus Installationbus

RS65x-Z22-G

up to PL e Cat. 4
ISO 13849-1

Ambient temperature
−40 °C
+70 °C

IP66
3 m
100 l/min
3 min

IP67
1 m
30 min

c UL us LISTED

Dupline Fieldbus Installationbus

AS-i INTERFACE SAFETY AT WORK

Visual Alarm

under preparation:

HazLoc

Ex NEPSI

SCHMERSAL

Flexible and customised solutions
BS655/BS656

Basic switch – Position Control

The basic switch version is modular in structure and is supplied without actuating elements. A range of functions can be mapped in combination with a specific function unit.

Belt alignment switches monitor belt alignment in material handling plants and are arranged in pairs on either side of the belt, close to the drive rollers and pulleys.

In the event of deviations on the conveyor belt, a staggered signal is generated as a pre-warning or to shut off the conveyor belt. This helps to prevent unwanted downtime as a result of damage.

Position switches are used to detect the position of and to monitor moving parts on railbound cranes, machinery and plants.

Level switches monitor the fill level at conveyor transfer stations, silos and bunkers.

Slack-wire switches monitor the wire tension on crane systems or wire-mounted transport equipment.

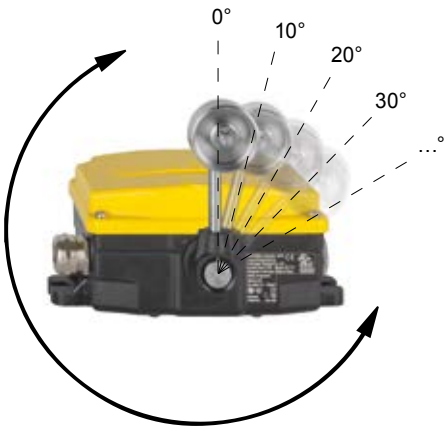

Connection

The new HDS series includes a closed cover over switching shafts, cams and switch contacts to prevent contamination from dust and dirt when installed in challenging conditions.

The key contacts in the switch elements are routed to a central CAGE CLAMP® connecting terminal. As such, pull-wire emergency stop switches or belt alignment switches, amongst others, can be easily and efficiently connected, including with an indicator lamp, if required.

Safe or standard two-wire bus systems can also be used for signal evaluation as an option.
In that case, only the input and output signal wires need to be connected, reducing assembly and connection times considerably.

The integrated cable guide also helps to ensure easy and rapid installation.

Adjustable switching points

The user can adjust the pre-set switching points of the basic switches between 10° and 35° at 1 increments. To do this, the dial on the respective switching element needs to be moved into the desired end position.

Flexible and customised solutions
BS655/BS656

Modular selection (construction kit)
Basic switch

The basic switch version is modular in structure and is supplied without actuating elements.
A range of functions can be mapped through combination with a specific actuating element.

Basic switch:
BS65x

Ordering code
Basic switch

EX-BS655-Z22-DN-G-2GD

EX-versions (Metal enclosure only)	
	non-EX version (Standard)
EX-BS655-…-2GD	Zone 1 (Ex ib), Zone 21 (Ex tb)

Housing material	
655	Metal enclosure (Grey cast iron)
656	Thermosetting resin

Switching elements	
Z22	Snap action, 2 NO contacts / 2 NC contacts
T22	Slow action, 2 NO contacts / 2 NC contacts
Z33	Snap action, 3 NO contacts / 3 NC contacts
T33	Slow action, 3 NO contacts / 3 NC contacts

Indicator lamp	
	Included in standard version
G024	Indicator lamp 24 VDC, red
G115	Indicator lamp 115 VAC, red
G230	Indicator lamp 230 VAC, red

Network options	
	not included in standard version
DN	Dupline non safe

Contact design	
	Silver contacts (Standard)
A1	Gold-plated contacts 0.3 µm
A2	Gold-plated contacts 3 µm
	under preparation

Modular selection (construction kit)

Actuator heads

BS-H50-110-RKS

BS-H50-110-RVA

BS-B30-150-RVA
up to 3 m/s

BS-B50-150-RVA
up to 6 m/s

BS-B90-150-RVA
up to 12 m/s

N95-**x**00-RKS

Ordering code

Actuator heads

BS-B30-150-RVA

Position switch lever (Roller diameter 50 mm)	
H50-110-RVA	Stainless steel lever with stainless steel roller
H50-110-RKS	Stainless steel lever with plastic roller

Level switch lever (95 x 140 mm)	
N95-300-RKS	Stainless steel lever, 300 mm, with plastic plate
N95-400-RKS	Stainless steel lever, 400 mm, with plastic plate
	under preparation

Belt alignment lever (running surface 150 mm)	
B30-150-RVA	Stainless steel lever with Ø 30 mm stainless steel roller
B50-150-RVA	Stainless steel lever with Ø 50 mm stainless steel roller
B90-150-RVA	Stainless steel lever with Ø 90 mm stainless steel roller

Slack-wire switch lever (running surface 150 mm)	
S30-150-RVA	Stainless steel lever with Ø 30 mm stainless steel roller
	under preparation

Pull-wire emergency stop switches
RS655/RS656

Pull-wire emergency stop switches – STOP CONTROL

The two-sided pull-wire emergency stop switches are designed for lengths of wire up to 100 m on each side, under optimal conditions. Pull-wire emergency stop switches with wire breakage detection ensure a reliable emergency-stop function on material handling plants. If actuated, two-sided pull-wire emergency stop switches latch in the emergency-stop position and can only be unlocked when the release device is actuated. All devices satisfy the requirements of international standards IEC 60947-5-5, ISO 13850 and EN 620.

In conjunction with an appropriate safety evaluation or a safe network, the pull-wire emergency stop switch can be used up to Performance Level PL e in safety applications.

As a status display, the pull-wire emergency stop switch is equipped with a mechanical status indicator that is visible when triggered. The switch can be reset with the blue RESET button integrated into the trigger lever.

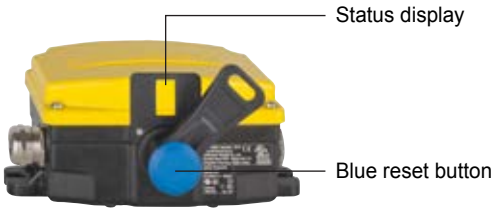

Ordering code

Pull-wire emergency stop switches

EX-RS655-Z22A1-DS-G-2GD

EX-versions (Metal enclosure only)	
	non-EX version (Standard)
EX-RS655-…-2GD	Zone 1 (Ex ib), Zone 21 (Ex tb)

Housing material	
655	Metal enclosure (Grey cast iron)
656	Thermosetting resin

Switching elements	
Z22	Snap action, 2 NO contacts / 2 NC contacts

Indicator lamp RS656	
	Included in standard version
G024	Indicator lamp 24 VDC, red
G115	Indicator lamp 115 VAC, red
G230	Indicator lamp 230 VAC, red

Network options	
	not included in standard version
DS	DuplineSafe

Contact design	
	Silver contacts (Standard)
A1	Gold-plated contacts 0.3 µm
A2	Gold-plated contacts 3 µm under preparation

Technical data

	■ Pull-wire emergency stop switch RS	■ Basic switch BS
Key Features		
	• Symmetry thanks to centrally located shaft • Central connection terminal • Mechanical switching position indication • Maximum length of wire 2 x 100 m • Wire pull and wire breakage detection	• Platform concept with different function units • Symmetry thanks to toothed, centrally located shaft • Central connection terminal • Different actuating elements • Actuating elements adjustable in 10° steps • Switching point setting
Technical features		
Electrical characteristics		
Number of contacts	2 NO / 2 NC	Up to 3 NO / 3 NC
Utilisation category	AC-15: 240 V / 3 A; DC-13: 24 V / 3 A	AC-15: 240 V / 3 A; DC-13: 24 V / 3 A
Min. switching capacity	12 VDC / 1 mA	12 VDC / 1 mA
Thermal test current I_{the}	6 A	6 A
Switching principle	Snap action	Snap- or slow action
Mechanical data		
Cable entry	2 x M25 x 1.5	2 x M25 x 1.5
Cable section	0.5 … 2.5 mm² (central connection terminal)	0.5 … 2.5 mm² (central connection terminal)
Mechanical life	100,000	1,000,000
Dimensions (H x W x D)	234 x 108 x 163 mm	234 x 108 x 143 mm
Housing material	Grey cast iron or thermosetting resin	Grey cast iron or thermosetting resin
Ambient conditions		
Ambient temperature	–40 °C … +70 °C	–40 °C … +70 °C
Protection class	IP66, IP67	IP66, IP67
Network connection (optional)	DuplineSafe	Dupline
Safety classification		
B_{10D} NC contact	200,000	2,000,000
B_{10D} Normally open contact (NO)		
Approvals (Standard)		
Approvals (EX)		
EX zones (Metal enclosure only)	1 (Ex ib), 21 (Ex tb)	1 (Ex ib), 21 (Ex tb)
Approvals (under preparation)		

Accessories

Pull-wire emergency stop switches

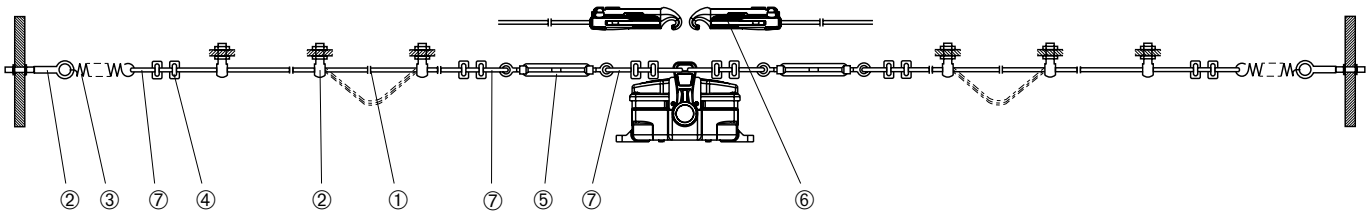

① Wire rope

- With red PVC sheath — **on request**
- Ø total 5 mm
- Ø of the steel core 3 mm

② Eyebolt or anchoring hook

- BM 10 x 40 — **101084928**
- BM 8 x 70 stainless steel — **101192471**
- Included in delivery: Eyebolt with nut

③ Tension spring

- Stainless steel tension spring with elongation limiter — **103032772**
- For Pull-wire emergency stop switch RS65x

④ Wire clamp

- 3 mm stainless steel — **101203477**
- 5 mm stainless steel — **101203478**

⑤ Tensioner

- **Tensioner M6 (Galvanised steel)** — **101087930**
  Setting range 145 … 225 mm
- **ACC-TBLE-RVA (Stainless steel)** — **103031494**
  Setting range 180 … 250 mm

⑥ Wire tensioner S 900

- **Wire tensioner S 900** — **101186704**
- Smooth and time-saving adjustment

⑦ Wire thimble

- 3 mm stainless steel — **101203472**
- 5 mm stainless steel — **101203476**

Accessories

Eyebolt

- BM 10 x 40 **101084928**
- BM 8 x 70 stainless steel **101192471**
- Included in delivery: Eyebolt with nut

Anchoring hook

Galvanised steel
- ACC-EBLT-M8 **103031495**
- ACC-RBLT-M10 **103031498**

Included in delivery: anchoring hooks incl. 2 nuts and washers

Anchoring hook

Stainless steel
- ACC-EBLT-M8-RVA **103031496**
- ACC-EBLT-M10-RVA **103031499**

Included in delivery: anchoring hooks incl. 2 nuts and washers

Wire clamp

- Wire clamp
- 3 mm stainless steel **101203477**
- 5 mm stainless steel **101203478**

Duplex wire clamp 101190917

- Duplex wire clamp 3 mm (stainless steel)

Egg-shaped wire clamp 101196043

- Egg-shaped wire clamp, size 3

Wire thimbles

- Wire thimble
- 3 mm stainless steel **101203472**
- 5 mm stainless steel **101203476**

Pulley 101192433

- Pulley (stainless steel) to guide the wire rope where the path is not a straight line
- According to ISO 13850, pulleys may only be mounted in such a way that the complete length of the pull-wire is visible.

Tensioning Jack

Galvanised steel
- Tensioner M6 **101087930**
- Setting range 145 … 225 mm

Stainless steel
- ACC-TBLE-RVA **103031494**
- Setting range 180 … 250 mm

For detailed information on selection, visit **www.schmersal.net**.

Accessories

Tension spring 103032772

- Stainless steel tension spring with elongation limiter
- For Pull-wire emergency stop switch RS65x

Wire rope

- Wire rope **on request**
- With red PVC sheath
- Ø total 5 mm
- Ø of the steel core 3 mm

Wire unit complete

- Wire unit complete **on request**
- Ready-to-fit
- Included in delivery: 1 Wire rope; 2 Wire clamps; 1 Duplex wire clamp; 1 Wire thimble; 1 Eyebolt

S 900 rope tensioner 101186704

- S 900 rope tensioner
- Smooth and time-saving adjustment

ACC-CGLD-M25-MS 103006012

- Cable gland M25 x 1.5
- Brass, nickel-plated
- For RS655/BS655
- Authorised cable diameter 9 … 16 mm
- Tightening torque 8 Nm

ACC-BPL-M25-MS 103006010

- Locking screw M25 x 1.5
- Brass, nickel-plated
- For RS655/BS655
- Tightening torque 8 Nm

ACC-CGLD-P-M25 103031491

- Cable gland M25 x 1.5
- Thermoplastic with pressure compensation element
- For RS656/BS656
- Authorised cable diameter 9 … 17 mm
- Tightening torque 8 Nm

ACC-CGLD-P-M25-MS 103031489

- Cable gland M25 x 1.5
- Brass, nickel-plated with pressure compensation element
- For RS655/BS655
- Authorised cable diameter 9 … 17 mm
- Tightening torque 8 Nm

ACC-PWR-ESLB 103032469

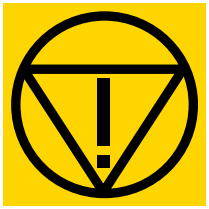

- Emergency-stop release cord marking label
- 50 pieces, according to ISO 13850

For detailed information on selection, visit **www.schmersal.net**.

The Schmersal Group

In the demanding field of machine safety, the owner-managed Schmersal Group is one of the international market leaders. The company, which was founded in 1945, has a workforce of about 2000 people and seven manufacturing sites on three continents along with its own companies and sales partners in more than 60 countries.

Customers of the Schmersal Group include global players from the area of mechanical engineering and plant manufacturing as well as operators of machinery. They profit from the company's extensive expertise as a provider of systems and solutions for machine safety. Furthermore, Schmersal specialises in various areas including food & beverage, packaging, machine tools, lift switchgear, heavy industry and automotive.

A major contribution to the systems and solutions offered by the Schmersal Group is made by tec.nicum with its comprehensive range of services: certified Functional Safety Engineers advise machinery manufacturers and machinery operators in all aspects relating to machinery and occupational safety – and do so with product and manufacturer neutrality. Furthermore, they design and realise complex solutions for safety around the world in close collaboration with the clients.

Safety Products

- Safety switches and sensors, solenoid interlocks
- Safety controllers and safety relay modules, safety bus systems
- Optoelectronic and tactile safety devices
- Automation technology: position switches, proximity switches

Safety Systems

- Complete solutions for safeguarding hazard areas
- Individual parametrisation and programming of safety controllers
- Tailor-made safety technology – be it for individual machines or a complex production line
- Industry-specific safety solutions

Safety Services

- tec.nicum academy – Seminars and training
- tec.nicum consulting – Consultancy services
- tec.nicum engineering – Design and technical planning
- tec.nicum integration – Execution and installation

The details and data referred to have been carefully checked.
Subject to technical amendments and errors.

www.schmersal.com

x.000 / L+W / 03.2019 / Teile-Nr. 103032424 / EN / Ausgabe 01

SCHMERSAL